# BDH160

## Optical beam smoke detector




The BDH160 device is a linear optical smoke detector featuring transreflective technology and a motorized head that automatically aligns the detector beam and continuously adjusts its alignment to compensate for building movement.
Smoke contamination is detected by the analysis of the IR return beam from the reflector implemented by the transreflective technology of the device, which via an infrared transceiver is capable of signaling fire outbreaks.
A control unit is provided for configuring and managing the device's functions, including automatic and manual beam alignment, maintenance and diagnostic operations, detector sensitivity adjustment, and test functions to verify correct fire alarm signalling at both the detector and the fire control panel.
The standard version of the device has a coverage range of 7 to 70 meters thanks to a supplied reflector; for large buildings it is possible to extend coverage to up to 160 meters by means of extension kits (medium and long range).

### MAIN FEATURES

- Detector with integrated TX/RX, reflector and motorized detector head for automatic beam alignment
- Connectable to Inim Loop via EU311 module
- Powered independently or from Loop
- Max. 20 detectors powered by a single Loop (to be verified with Loop calculation software)
- Control unit for management and maintenance operations

### OPERATIVE STATUSES

| | |
|---|---|
| Normal conditions | The obscuration level is below the configured sensitivity threshold<br>Flashing green LED on transceiver<br>ON/OFF programmable |
| Alarm | The obscuration level exceeds the configured sensitivity threshold for a programmable period from 2 to 30 seconds, adjustable in 1-second increments (default setting: 10 seconds) |
| Alarm indications | Flashing red LED<br>Alarm relay switching contact (2A @ 30 Vdc) |
| Alarm sensitivity levels | From 25% (1.25dB) to 50% (3dB) in 1% (0.05dB) steps<br>(default setting: 35% (1.87dB)) |
| Fault | The obscuration level exceeds the fault threshold within 1 second.<br>Power off or supply voltage < 9 Vdc<br>Commissioning mode, Pre-Alignment, Auto Alignment<br>The transceiver switches off during maintenance operations<br>Time to Fault adjustable between 2 and 60 seconds in 1 second steps (default settings: 10 seconds) |
| Fault indications | Flashing yellow LED, 1 second<br>Switching fault relay contact (2A @ 30 Vdc) |
| Fault sensitivity level | ≤4% |

### TECHNICAL SPECIFICATIONS

| | |
|---|---|
| Power supply voltage | 12-30Vdc normal |
| Power supply current | |
| during operating mode (in all operating modes) | 3.5mA |
| during fast alignment | 17mA |
| Operating temperature | from -10°C to +55°C |
| Humidity | from 10 to 95%, RH without condensation |
| Protection grade | IP65 |
| Optical wavelength | 870nm |
| Dimensions (HxWxD) | |
| Transceiver | 180 x 155 x 137 mm |
| Control unit | 185 x 120 x 62 mm |
| Weight | |
| Transceiver | 1.1 Kg |
| Control unit | 0.55 Kg |

# BDH160

## DIMENSIONS

BDHADAPT

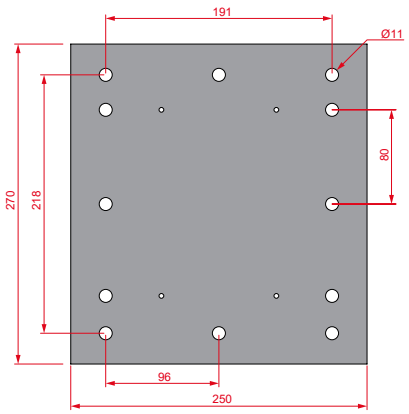


70KIT140

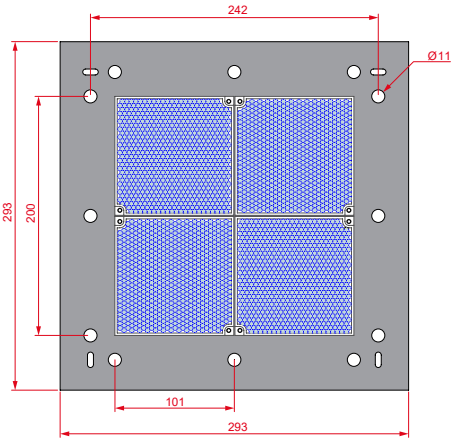


140KIT160

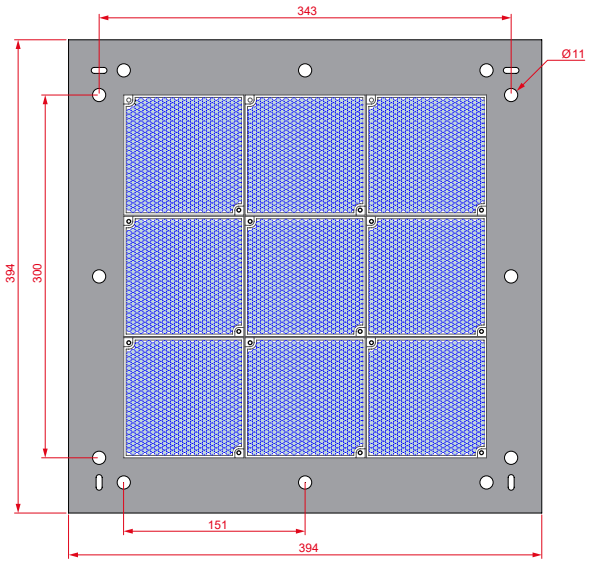


Control unit

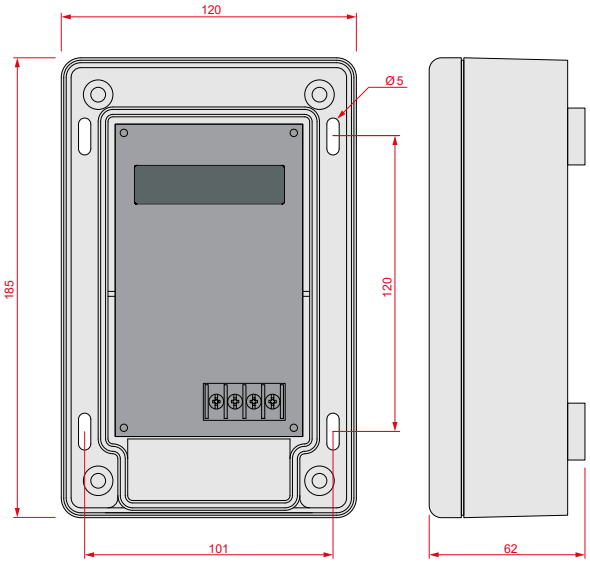


BDH160 Detector

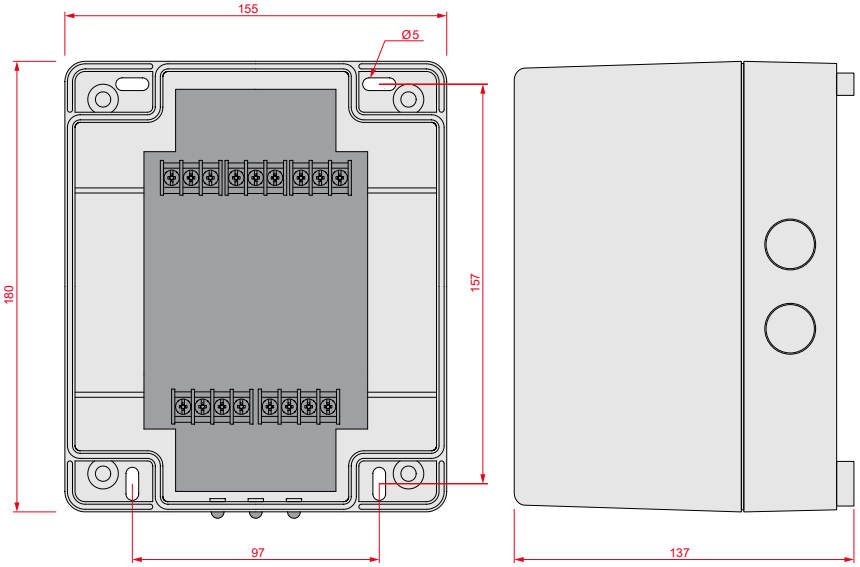


## ORDER CODES

| | |
|---|---|
| **BDH160** | Self-aligning optical linear smoke detector from 5 to 70 meters |
| **BDH260** | Self-aligning optical linear smoke detector from 5 a 70 meters with Bluetooth interface and management App |
| **BDHADAPT** | Mounting plate for beam head or single reflector |
| **70KIT140** | Mid-range reflector extension kit (70 to 140 meters) |
| **140KIT160** | Long-range reflector extension kit (140 to 160 meters) |
| **FB-BRACKET** | Swivel plate for prism reflector |
| **FOGKIT** | Anti-fogging kit for optical linear beam smoke detectors from BDH series |
| **FOGREF** | Reflector for FOGKIT anti-fogging kit for BDH series optical linear beam smoke detectors |


Evolving Protection

Via Dei Lavoratori 10
63076 Monteprandone (AP) – ITALY
Tel. (+39) 0735 705007 _ Fax (+39) 0735 704912

**info@inim.it** _ inim.it


Inim distributor's stamp and signature